Phone +49 - 22 03 - 96 49-145
Fax +49 - 22 03 - 96 49-334

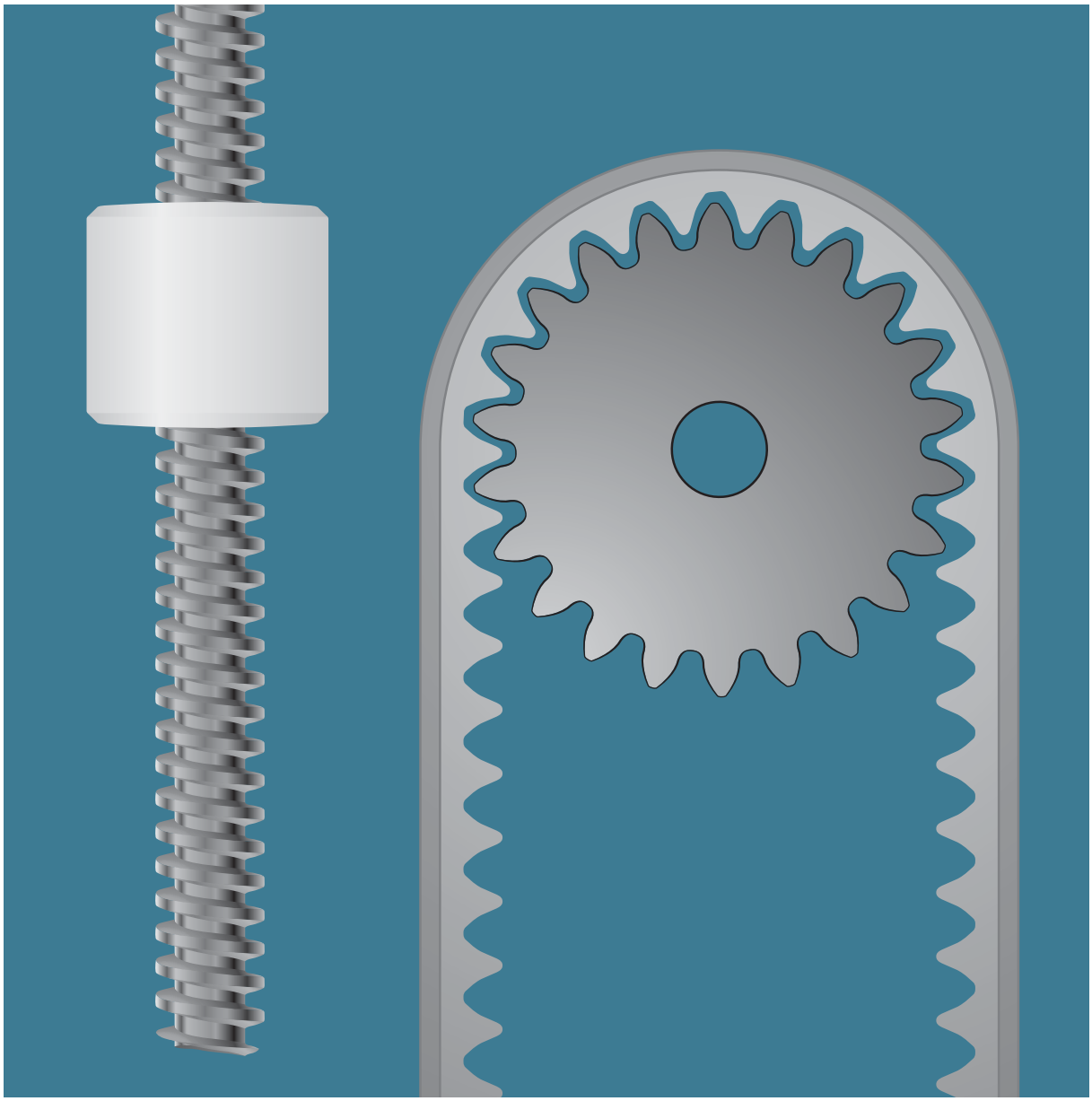

DryLin® Drive engineering

DryLin® SHT Linear

DryLin® SHT
▶ Page 66.2

- for lower speed
- also for high loads
- low-priced, robust and compact
- self-braking by friction

DryLin® ZLW belt drive

DryLin® ZLW
▶ Page 66.18

- quick handling
- for lighter loads
- cost-effective
- corrosion resistant

Phone +49 - 22 03 - 96 49-145
Fax +49 - 22 03 - 96 49-334
igus® GmbH
51147 Cologne
Internet www.igus.de
E-mail info@igus.de

DryLin® SHT | Linear Slide Tables

Dry running maintenance-free slide tables operate with iglidur bearings and are available in a wide variety of configurations, including various combinations of screw, housing and shaft materials, which allows you to implement low weight, low corrosion and low cost solutions.

+90°
–40°

Technical Data

Liner material:
- iglidur® J
- iglidur® X

Shaft materials:
- Anodized aluminium
- Case-hardenend steel
- Stainless steel

Leadscrew materials:
- Steel
- Stainless steel
- Hard anodized aluminium

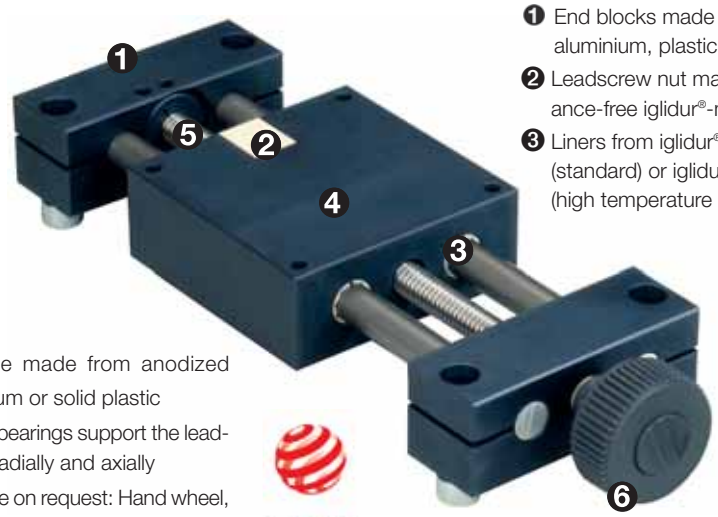

❶ End blocks made from anodized aluminium, plastic or zinc die-casting
❷ Leadscrew nut made from maintenance-free iglidur®-material
❸ Liners from iglidur® J ▶ Page 3.2 (standard) or iglidur® X ▶ Page 6.2 (high temperature material)
❹ Carriage made from anodized aluminium or solid plastic
❺ iglidur® bearings support the leadscrew radially and axially
❻ Available on request: Hand wheel, clamp, position indicator

reddot design award winner 2006

High dirt resistance

Cost-effective and reliable at the same time

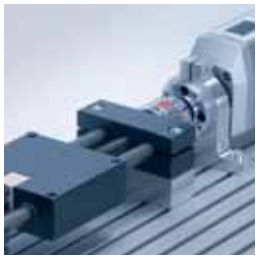

Modular design, allows easy installation

Structure of the part number:

SHT - 12 - AWM - 150 - HR - ES

Leadscrew material

Leave blank	= Steel (standard)
ES	= Stainless steel
AL	= Hard anodized aluminium

Additional options

Leave blank	= Standard
HK	= Leadscrew clamping
PA	= Position indicator
HR	= Hand wheel
PL	= preload
HTX	= High temp. version
Z	= No machining (TR10x2)
HK-PA-HR	= Different accesories

Length of stroke

Shaft material

AWM	= Hard anodized aluminium
SWM	= Case-hardened steel
EWM	= Stainless steel

Dimensions

1040	= shaft Ø 10 mm, TR10x2 (SLW)
12	= shaft Ø 12 mm, TR10x2
1660	= shaft Ø 16 mm, TR14x4 (SLW)
20	= shaft Ø 20 mm, TR18x4
2080	= shaft Ø 20 mm, TR18x4 (SLW)
25	= shaft Ø 25 mm, TR10x2 (SET)
30	= shaft Ø 30 mm, TR24x5

Type

SHT	= Basic ▶ Page 66.5
SHTP	= Cost-effective ▶ Page 66.8
SLW	= Compact ▶ Page 66.10
SHTC	= Flexible ▶ Page 66.12
SHTS	= Fast ▶ Page 66.13
SET	= EasyTube ▶ Page 66.14

Lifetime calculation, CAD files and much more support ▶ www.igus.de/en/DryLinSHT

DryLin® SHT | **Product Range**

SHT – Basic*

The reliable solution for almost any application: 3 dimensions, a variety of possible material combinations, high load capacity and completely maintenance-free. Dimensionally interchangeable with most common linear slide tables.

▶ Page 66.5

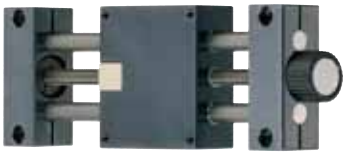

reddot design award winner 2006

SHT-PL "preload"*

The new DryLin® linear slide table allows you to adjust the clearance. The axial clearance is preloaded at 50 N. The stroke is infinitely variable. End blocks and carriages made from anodised aluminium guarantee low weight, high stability and corrosion resistance (when used with stainless steel leadscrews).

▶ Page 66.6

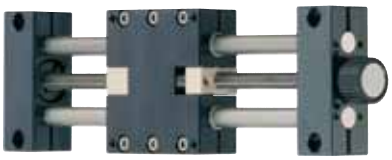

SHT-/SLW-XY-Tables*

High precision, extreme stiffness and exact alignment because the carriage is one piece. DryLin®-XY-tables are available as SHT, SHT "preload" and SLW.

▶ Page 66.7

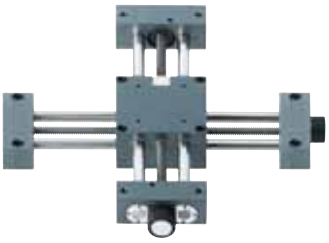

SHTC – Flexible*

The special feature of this module is the free design of the slide length: two short carriages form the basis of the slide. The distance between the two can easily be adjusted to adapt to specific application requirements. Especially useful for vertical applications with a cantilevered load. The system can be varied in the same way as the standard SHT system.

▶ Page 66.8

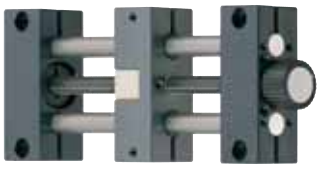

SHTS – Fast*

50 mm or 100 mm advance with one rotation. The two available high helix threads of 10 x 50 or 18 x 100 ensure fast feed speeds in lightly loaded applications. The product can be configured in the same way as the standard SHT system.

▶ Page 66.9

reddot design award winner 2006

SLW – Compact*

This low-profile solution is based on the fully supported DryLin® W system. Therefore the system offers rigidity and torsion resistance at an economic price. DryLin® SLW is also available in stainless steel (only size 1040).

▶ Page 66.10

SET – EasyTube

Simple, but an effective and solid design: that's the new DryLin® SET EasyTube. A complete system from few components for simple linear adjustments.

▶ Page 66.12

SHTP – Cost-effective*

The use of solid plastic end blocks and carriage makes this version an unbeatably cost-effective and lightweight solution. Recommended for handling all low weight applications by hand as well as occasionally with motor drives.

▶ Page 66.13

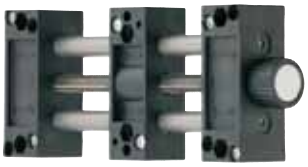

Accessories

Nearly all linear slide tables can be combined with hand wheels, clamps or position indicators.

▶ Page 66.16

ZLW

DryLin® toothed belt drives have been developed for the quick positioning of small loads. The linear units with toothed belt drive are corrosion resistant, light and compact, and have a low inertia due to low mass of guide and carriage.

▶ Page 66.18

*** Leadscrew end TR10x2, 10x50 supplied unmachined. The hand wheels in the pictures are available as accessories.**

Phone +49 - 22 03 - 96 49-145
Fax +49 - 22 03 - 96 49-334

Phone +49 - 22 03 - 96 49-145
Fax +49 - 22 03 - 96 49-334
igus® GmbH
51147 Cologne
Internet www.igus.de
E-mail info@igus.de

DryLin® SHT | Design/Calculation

DryLin® linear leadscrew units have been developed for position settings of all types. The linear setting is achieved by means of trapezoidal leadscrew that can be operated manually or by motor. The maximum linear continuous speed is 1 m/min.

The suitability of the linear slide unit for an application can be checked using the graphs below.

The following trapezoidal leadscrew drive sizes are used in SHT linear tables:

- TR 10 x 2: SHT-12, SHTC-12, SHTP-12, SLW-1040, SLW-1040-ES, SLW-1080, SET-25
- TR 14 x 4: SLW-1660
- TR 18 x 4: SHT-20, SHTC-20, SLW-2080
- TR 24 x 5: SHT-30, SHTC-30
- TR 26 x 5: SHTC-40
- TR 30 x 6: SHTC-50

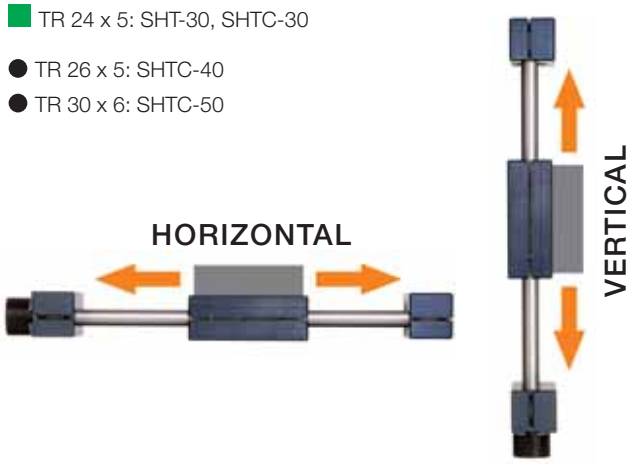

Design

Vertical applications

Please note that the max. loads given in the diagrams are axial loads. This is the case for example in vertical applications (weight to be moved = axial load).

Horizontal applications

For horizontal mounting you can also use the diagrams. The conversion from radial load to axial load (with symmetrical loads) could be done with this formula: $F_{radial} \times 0{,}25 = F_{axial}$

For example: 60 kg should be moved horizontally: 600 N x 0,25 = 150 N axial load

Max. feed [m/min.]

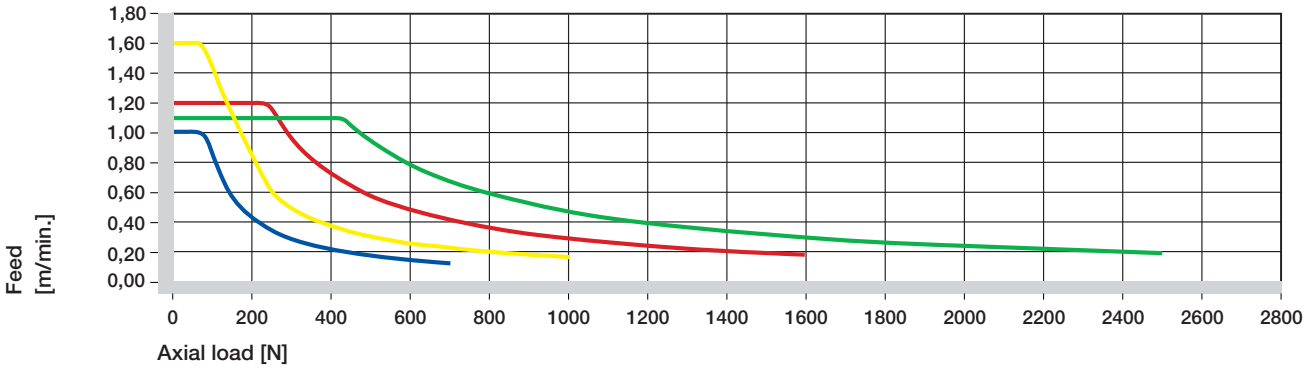

Max. permissible rotation speed leadscrew [rpm]

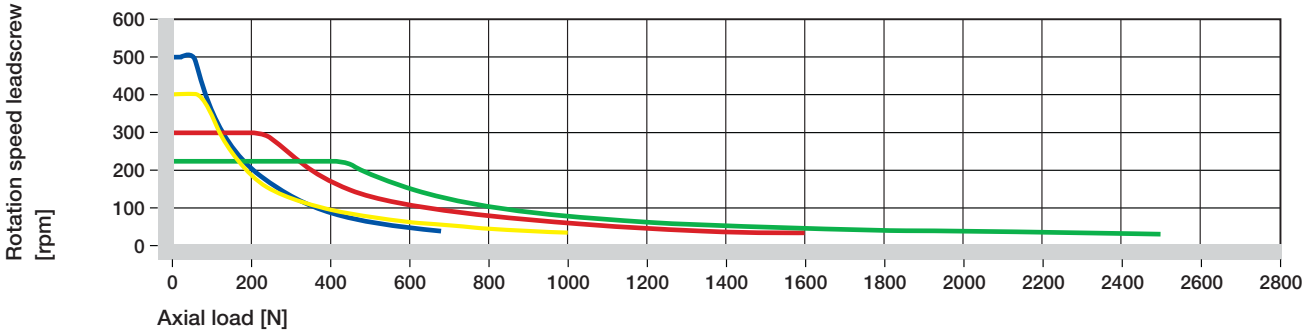

Drive torque [Nm]

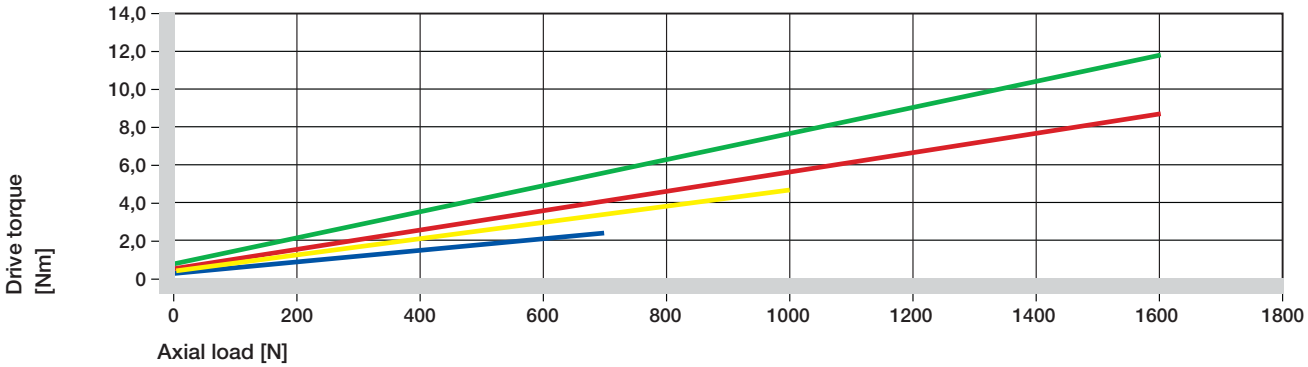

Lifetime calculation, CAD files and much more support ► www.igus.de/en/DryLinSHT

reddot design award
winner 2006

High temperature version

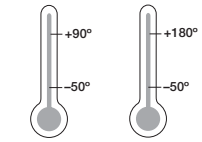

Standard High temperature

Special properties

- Solid design
- 3 different sizes
- Different shaft and leadscrew materials offering highest flexibility
- Maintenance-free and corrosion resistant
- TR10x2, TR18x4, TR24x5
- Preload version available ▶ Page 66.6
- High temperature version available. Temperatures up to +180 °C possible. Shafts and leadscrews made from stainless steel.

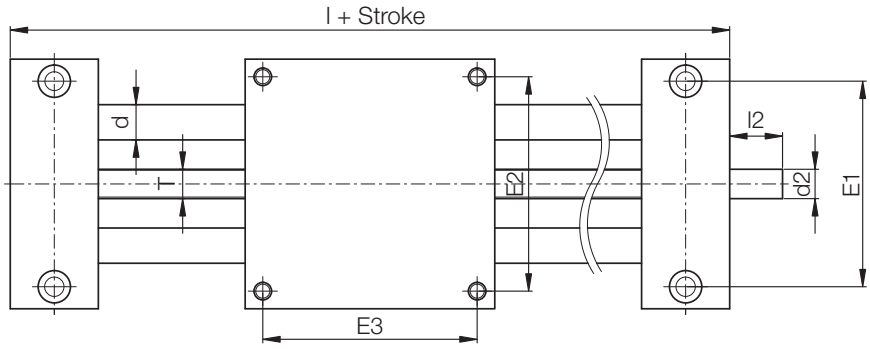

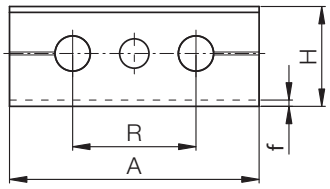

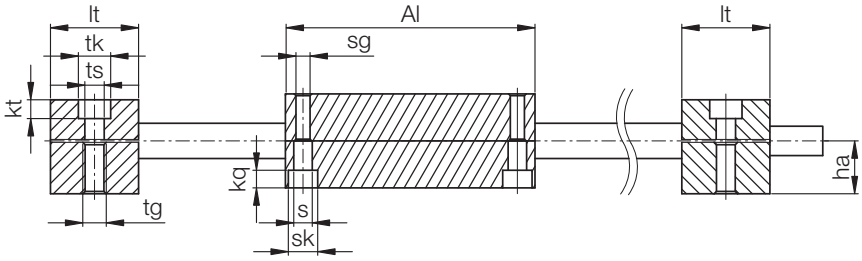

Lengths [mm] and Weight

Part No.	Maximum Stroke length [mm]	Aluminium Shaft Weight [kg]	Aluminium Shaft Additional weight (per 100 mm) [kg]	Steel Shaft Weight [kg]	Steel Shaft Additional weight (per 100 mm) [kg]	Max. static load-bearing capacity axial [N]	Max. static load-bearing capacity radial [N]
SHT-12-AWM	750	1,1	0,1	1,3	0,2	700	2800
SHT-12-EWM-HTX**	750	1,1	0,1	1,3	0,2	700	2800
SHT-20-AWM	1000	3,2	0,3	3,9	0,6	1600	6400
SHT-20-EWM-HTX**	1000	3,2	0,3	3,9	0,6	1600	6400
SHT-30-AWM	1250	8,6	0,6	10,9	1,4	2500	10000

Dimensions [mm]

Part No.	A –0,3	Al –0,3	H	E1 ±0,15	E2 ±0,15	E3 ±0,15	l	R	f	lt ±0,1	tk	ts
SHT-12-AWM	85	85	34	70	73	73	145	42	2	30	11	6,6
SHT-12-EWM-HTX**	85	85	34	70	73	73	145	42	2	30	11	6,6
SHT-20-AWM	130	130	48	108	115	115	202	72	2	36	15	9,0
SHT-20-EWM-HTX**	130	130	48	108	115	115	202	72	2	36	15	9,0
SHT-30-AWM	180	180	68	150	158	158	280	96	4	50	20	13,5

Part No.	tg	kt ±0,1	s	sk	sg	kq	d	T	l2	d2 Standard	ha
SHT-12-AWM	M8	6,4	6,3	10	M6	6,0	12	TR10 x 2	17	TR10 x 2*	18
SHT-12-EWM-HTX**	M8	6,4	6,3	10	M6	6,0	12	TR10 x 2	17	TR10 x 2*	18
SHT-20-AWM	M10	8,6	6,4	11	M8	7,0	20	TR18 x 4	26	12 h9	23
SHT-20-EWM-HTX**	M10	8,6	6,4	11	M8	7,0	20	TR18 x 4	26	12 h9	23
SHT-30-AWM	M16	12,6	11,0	18	M12	10,6	30	TR24 x 5	38	14 h9	36

* TR10x2 leadscrew end unmachined
** High temperature version with shafts and leadscrew made from stainless steel.
More dimensions in preparation. Bearing material: iglidur® X, ▶ Chapter 6

Order example:
More details on part no. options: ▶ **Page 66.2**

Phone +49 - 22 03 - 96 49-145
Fax +49 - 22 03 - 96 49-334

Phone +49 - 22 03 - 96 49-145
Fax +49 - 22 03 - 96 49-334
igus® GmbH
51147 Cologne
Internet www.igus.de
E-mail info@igus.de

DryLin® SHT-PL | Adjustable clearance

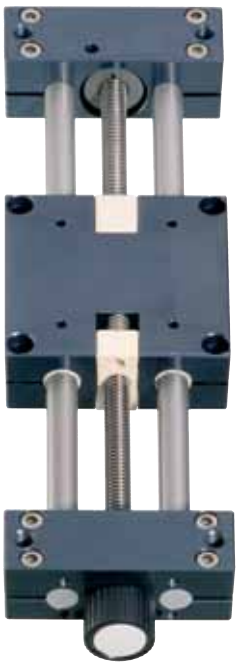

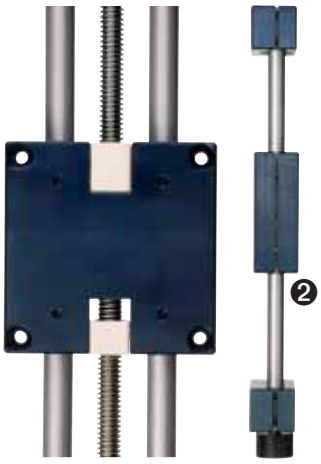

Properties

- Lubricant-free
- Preloaded trapezoidal lead screw nut, Pretension force 50 N
- Radial clearance is adjustable
- Low weight

Preloaded trapezoidal lead screw nut

❷ Radial clearance adjustable from both sides

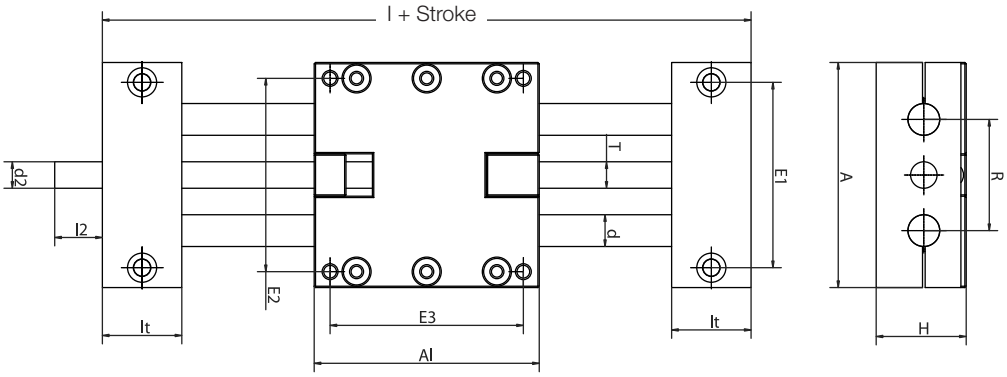

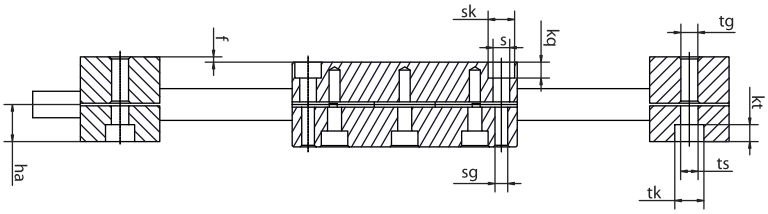

Lengths [mm] and Weight

Part No.	Maximum Stroke length [mm]	Aluminium Shaft Weight [kg]	Aluminium Shaft Additional weight (per 100 mm) [kg]	Steel Shaft Weight [kg]	Steel Shaft Additional weight (per 100 mm) [kg]	Max. static load-bearing capacity axial [N]	Max. static load-bearing capacity radial [N]
SHT-12-AWM-PL	750	1,1	0,1	1,3	0,2	700	2800
SHT-20-AWM-PL	1000	3,2	0,3	3,9	0,6	1600	6400
SHT-30-AWM-PL	1250	8,6	0,6	10,9	1,4	2500	10000

Dimensions [mm]

Part No.	A –0,3	Al –0,3	H	E1 ±0,15	E2 ±0,15	E3 ±0,15	l	R	f	lt ±0,1	tk	ts
SHT-12-AWM-PL	85	85	34	70	73	73	145	42	2	30	11	6,6
SHT-20-AWM-PL	130	130	48	108	115	115	202	72	2	36	15	9,0
SHT-30-AWM-PL	180	180	68	150	158	158	280	96	4	50	20	13,5

Part No.	tg	kt ±0,1	s	sk	sg	kq	d	T	l2	d2 Standard	ha
SHT-12-AWM-PL	M8	6,4	6,3	10	M6	6,0	12	TR10x2	17	TR10x2*	18
SHT-20-AWM-PL	M10	8,6	6,4	11	M8	7,0	20	TR18x4	26	12 h9	23
SHT-30-AWM-PL	M16	12,6	11,0	18	M12	10,6	30	TR24x5	38	14 h9	36

* TR10x2 leadscrew end unmachined

Order example:
More details on part no. options: ▶ **Page 66.2**

Lifetime calculation, CAD files and much more support ▶ www.igus.de/en/DryLinSHT

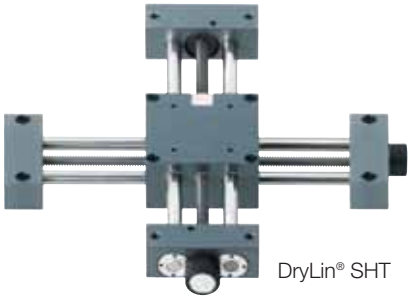

DryLin® SHT

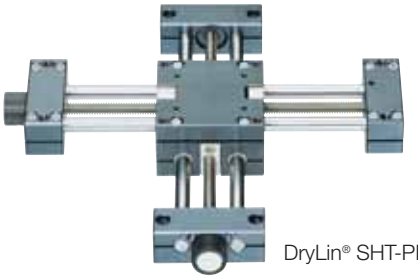

DryLin® SHT-PL

Special properties

- High precision, extreme stiffness and exact alignment, single piece carriage
- Available as standard and preloaded
- Preload-version even available as stainless steel version
- Totally lubricant- and corrosion-free
- Driven with trapezoidal thread TR10x2
- Accessories available (rotary knob, position indicator …)

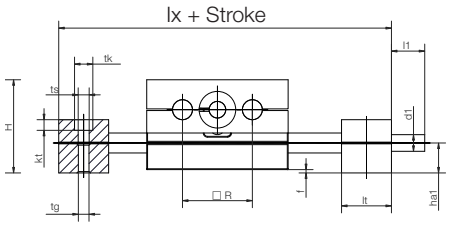

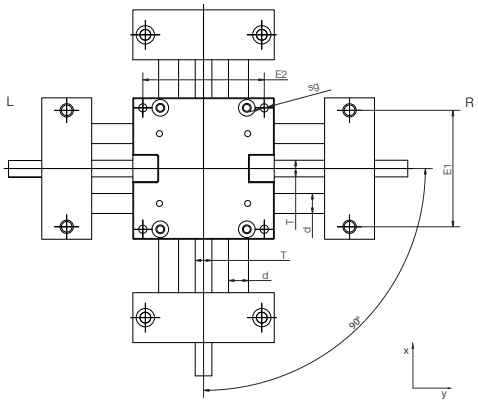

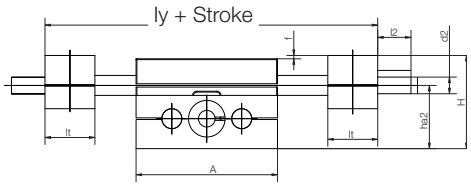

Lengths [mm] and Weight

Part No.	A –0,3 [mm]	H [mm]	E1 ±0,15 [mm]	E2 ±0,15 [mm]	Basic length lx [mm]	Basic length ly [mm]	R [mm]	f [mm]	lt ±0,1 [mm]	tk [mm]	ts [mm]	tg	kt [mm]
SHT-XY-12	85	56	70	73	145	145	42	2	30	11	6,6	M8	6,4
SHT-XY-12-PL	85	56	70	73	145	145	42	2	30	11	6,6	M8	6,4
SHT-XY-20-EWM-PL	130	86	108	115	202	202	72	2	36	15	9,0	M10	8,6

Dimensions [mm]

Part No.	sg	d [mm]	T	l1 [mm]	d1 Standard	d1 alternative	l2 [mm]	d2 Standard	d2 alternative	ha1 [mm]	ha2 [mm]	W ha2 – ha1 [mm]
SHT-XY-12	M6	12	TR10x2	17	TR 10x2	6h9	17	TR10x2	6h9	18	38	20
SHT-XY-12-PL	M6	12	TR10x2	17	TR 10x2	6h9	17	TR10x2	6h9	18	38	20
SHT-XY-20-EWM-PL	M8	20	TR18x4	26	TR 18x4	12h9	26	12h9	–	23	63	40

PL = SHT-Preload-version ▶ **Page 66.6**

Order example:
The rotary knob on the y-axis can be ordered installed on the left or on the right side.
Order example for left SHT-XY-12-**L**-200-300 for 200 mm strokelength on the x-axis and 300 mm on the y-axis.
Order example for left SHT-XY-12-**R**-200-300 for 200 mm strokelength on the x-axis and 300 mm on the y-axis.

Phone +49 - 22 03 - 96 49-145
Fax +49 - 22 03 - 96 49-334

DryLin® SHTC | **Flexible**

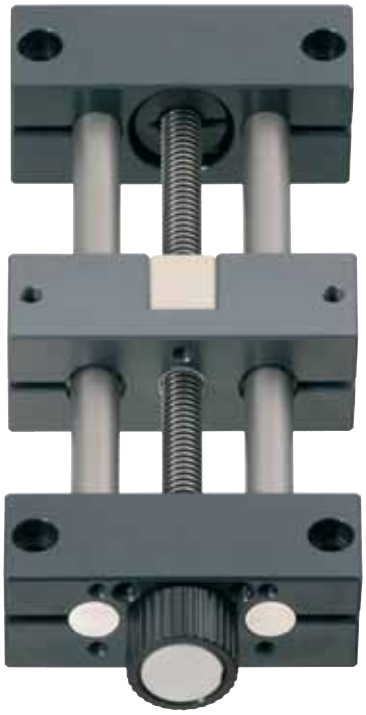

Special properties

- Solid flexible design
- Ideal for 2 carriages
- Dry running and maintenance-free
- 3 sizes
- Adjustable clearance

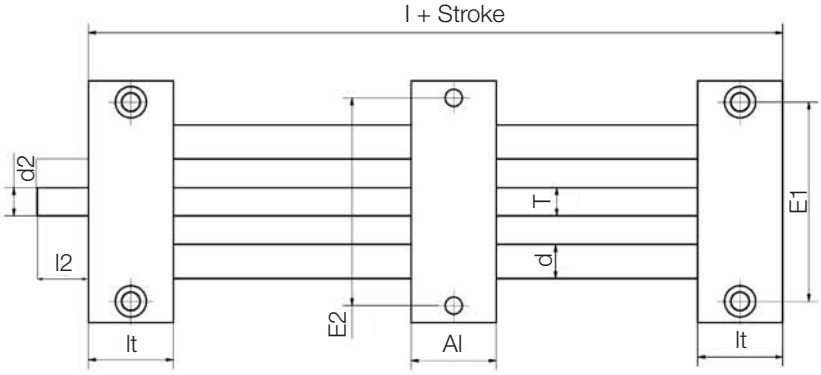

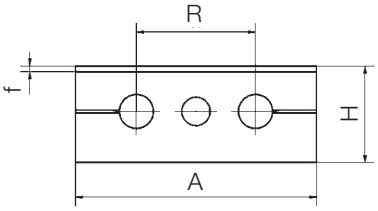

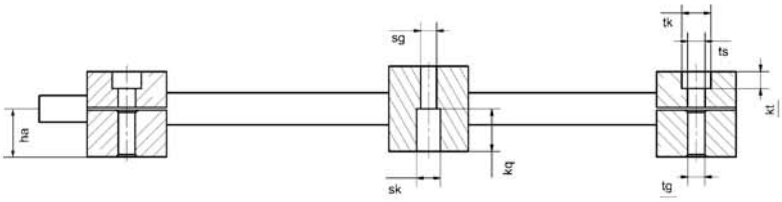

Lengths [mm] and Weight

Part No.	Maximum Stroke length [mm]	Aluminium Shaft Weight [kg]	Aluminium Shaft Additional weight (per 100 mm) [kg]	Steel Shaft Weight [kg]	Steel Shaft Additional weight (per 100 mm) [kg]	Max. stat. load-bearing capacity axial [N]	Max. stat. load-bearing capacity radial [N]
SHTC-12-AWM	750	0,7	0,1	0,8	0,2	700	2800
SHTC-20-AWM	1000	1,9	0,3	2,3	0,6	1600	6400
SHTC-30-AWM	1250	4,6	0,6	5,8	1,4	2500	10000
SHTC-40-AWM	1500	11,0	0,9	16,0	2,4	4000	16000
SHTC-50-AWM	1500	17,0	1,2	26,3	3,5	6250	25000

Dimensions [mm]

Part No.	A	Al –0,3	H –0,3	E1	E2 ±0,15	l ±0,15	R	f	lt	tk ±0,1	ts	tg
SHTC-12-AWM	85	30	34	70	73	90	42	2	30	11	6,6	M8
SHTC-20-AWM	130	36	48	108	115	108	72	2	36	15	9,0	M10
SHTC-30-AWM	180	50	68	150	158	150	96	4	50	20	13,5	M16
SHTC-40-AWM	230	70	84	202	202	210	122	4	70	20	13,5	M16
SHTC-50-AWM	280	80	100	250	250	240	152	4	80	20	13,5	M16

Part No.	kt ±0,1	sk	sg	kq	d	T	l2	d2 Standard	ha
SHTC-12-AWM	6,4	10	M6	6,0	12	TR10x2	17	TR10x2*	18
SHTC-20-AWM	8,6	11	M8	7,0	20	TR18x4	26	12 h9	23
SHTC-30-AWM	12,6	18	M12	10,6	30	TR24x5	38	14 h9	36
SHTC-40-AWM	12,6	20	M16	39	40	TR26x5	45	16	44
SHTC-50-AWM	12,6	20	M16	49	50	TR30x6	50	20	52

* TR10x2 supplied with leadscrew end unmachined

Order example:
More details on part no. options: ▶ **Page 66.2**

Lifetime calculation, CAD files and much more support ▶ www.igus.de/en/DryLinSHT

mm
DryLin® SHT
Phone +49 - 22 03 - 96 49-145
Fax +49 - 22 03 - 96 49-334
igus® GmbH
51147 Cologne
Internet www.igus.de
E-mail info@igus.de

reddot design award winner 2006

Special properties

- High helix pitch leadscrew
- High-speed solution
- Maintenance-free
- Dry running

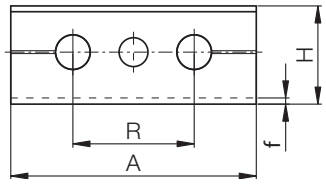

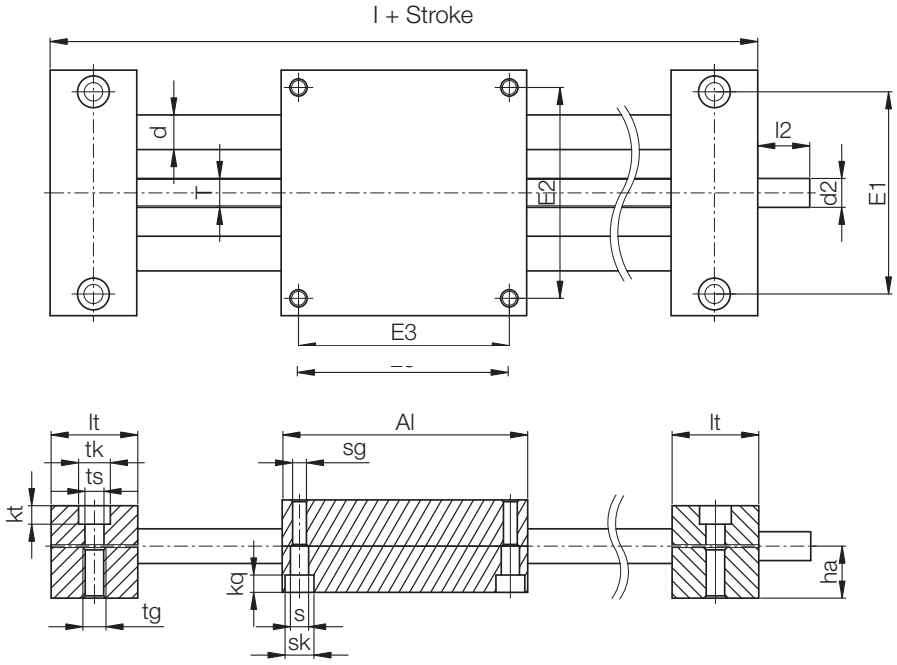

Lengths [mm] and Weight

Part No.	Maximum. Stroke length [mm]	Aluminium Shaft Weight [kg]	Aluminium Shaft Additional weight (per 100 mm) [kg]	Max. static load-bearing capacity axial [N]	Max. static load-bearing capacity radial [N]
SHTS-12-AWM	750	0,7	0,1	100	400
SHTS-20-AWM	1000	1,9	0,3	400	1600

Dimensions [mm]

Part No.	A –0,3	Al –0,3	H	E1 ±0,15	E2 ±0,15	E3 ±0,15	l	R	f	lt ±0,1	tk	ts	tg
SHTS-12-AWM	85	85	34	70	73	73	145	42	2	30	11	6,6	M8
SHTS-20-AWM	130	130	48	108	115	115	202	72	2	36	15	9,0	M10

Part No.	kt ±0,1	s	sk	sg	kq	d	T	l2	d2 Standard	ha
SHTS-12-AWM	6,4	6,3	10	M6	6,0	12	TR10x50	17	TR10x50*	18
SHTS-20-AWM	8,6	6,4	11	M8	7,0	20	TR18x100	26	12 h9	23

* TR10x50 supplied with leadscrew end unmachined

Order example:
More details on part no. options: ▶ Page 66.2

Phone +49 - 22 03 - 96 49-145
Fax +49 - 22 03 - 96 49-334

Phone +49 - 22 03 - 96 49-145
Fax +49 - 22 03 - 96 49-334
igus® GmbH
51147 Cologne
Internet www.igus.de
E-mail info@igus.de

DryLin® SLW | **Compact**

Stainless steel version

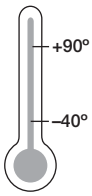

Special properties

- Low-profile and compact
- High torsional stiffness
- Fully supported
- Hard anodized rail
- 2 sizes
- Zinc diecast end blocks
- Special version SLW-AL with end blocks made from anodized aluminium available on request
- Stainless steel version: all metallic components are corrosion resistant (1.4305 or 1.4571).
  Bearing material options: iglidur® J, X or A180

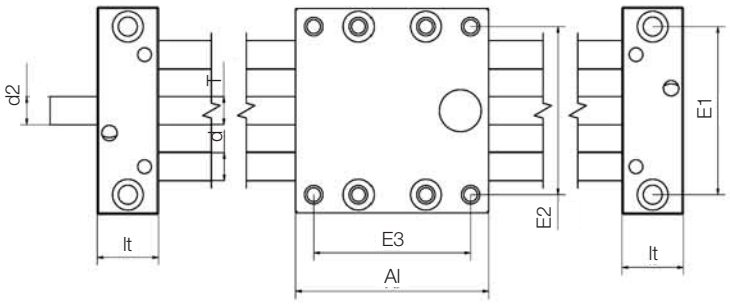

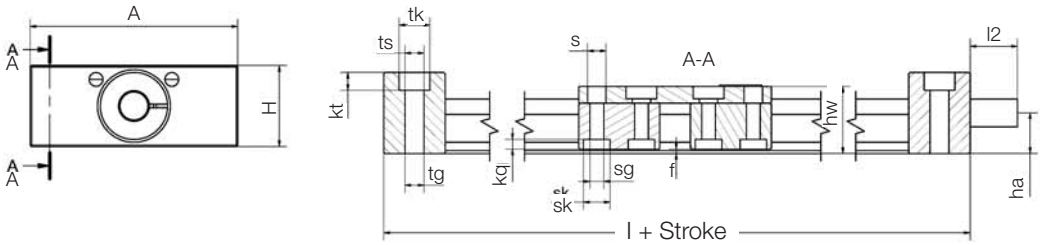

Lengths [mm] and Weight

Part No.	Maximum Stroke length [mm]	Shaft Weight [kg]	Shaft Additional weight (per 100 mm) [kg]	Max. static load-bearing capacity axial [N]	Max. static load-bearing capacity radial [N]
SLW-0630	300	0,2	0,08	50	200
SLW-1040	750	0,7	0,1	700	2800
SLW-1040-ES	750	1,4	0,2	700	2800
SLW-1080	750	0,9	0,2	700	2800
SLW-1660	750	1,5	0,3	1200	4600
SLW-2080	1000	3,0	0,4	1600	6400

Dimensions [mm]

Part No.	A –0,3	Al** –0,3	H	E1 ±0,15	E2 ±0,15	E3 ±0,15	l	hw	f	lt –0,1	tk	ts	tg
SLW-0630	54	60	20	40	45	51	100	17,5	1,2	20	11	6,2	–
SLW-1040	74	69	29	60	60	56	113	24	1,5	22	11	6,8	M8
SLW-1040-ES	74	100	29	60	60	87	144	24	1,5	22	11	6,8	M8
SLW-1080	108	100	29	94	94	87	144	24	1,5	22	11	6,8	M8
SLW-1660	104	100	37	84	86	82	150	35	1,5	25	15	9,0	M10
SLW-2080	134	150	46	116	116	132	206	44	1,5	28	15	8,6	M10

Part No.	kt ±0,1	s	sk	sg	kq	d	T	l2	d2 Standard	ha
SLW-0630	8,0	4,5	7,0	M4	2,0	5	M8	15	M8	9,5
SLW-1040	6,4	6,6	9,5	M6	4,4	10	TR10x2	17	TR10x2*	14,5
SLW-1040-ES	6,4	6,6	9,5	M6	4,4	10	TR10x2	17	TR10x2*	14,5
SLW-1080	6,4	6,6	9,5	M6	4,4	10	TR10x2	17	TR10x2	14,5
SLW-1660	8,6	9,0	11	M8	5,5	16	TR14x4	20	TR14x4*	18,5
SLW-2080	8,6	9,0	14,0	M8	5,5	20	TR18x4	26	12 h9	23,0

* supplied with leadscrew end unmachined; ** Carriages also in 100, 150, 200 and 250 mm lengths available on request

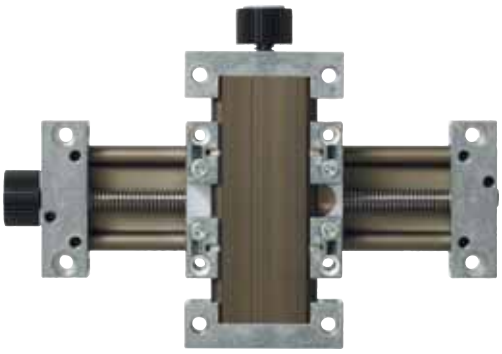

SLW-XY-1040

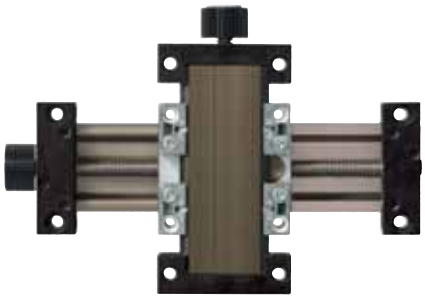

SLW-XY-0630

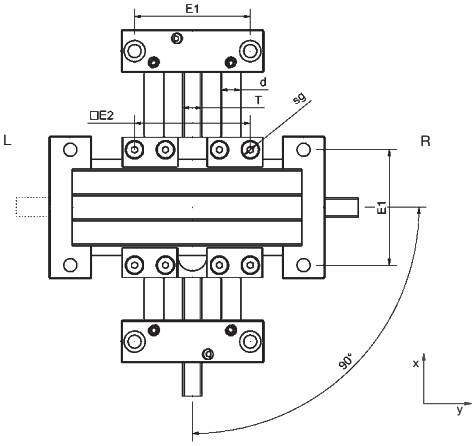

Special properties

- Low cost
- Lubricant- and corrosion-free
- Drive with trapezoidal thread TR10 x 2
- Accessories available (rotary knob, position indicator …)

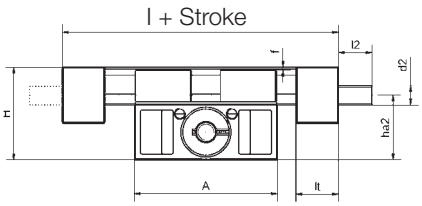

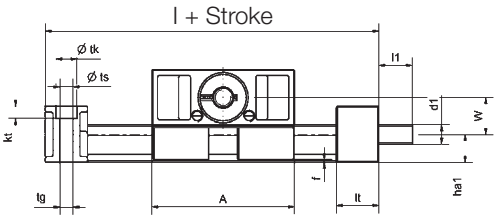

Dimensions [mm] and Lengths

Part No.	A –0,3 [mm]	H [mm]	E1 ±0,15 [mm]	E2 ±0,15 [mm]	Basic length lx [mm]	Basic length ly [mm]	f [mm]	lt [mm]	tk ±0,1 [mm]	ts [mm]	tg	kt [mm]
SLW-XY-0630	54	37,4	40	45	94	94	1,2	20	11	8	M8	8
SLW-XY-1040	74	48	60	60	117	117	1,5	22	11	6,6	M8	6,4

Dimensions [mm]

Part No.	sg	d [mm]	T	l1 [mm]	d1 Standard	d1 alternative	l2 [mm]	d2 Standard	d2 alternative	ha1 [mm]	ha2 [mm]	W ha2 – ha1 [mm]
SLW-XY-0630	M4	□5	M8	15	M8	–	15	M8	–	9,5	27,9	18,4
SLW-XY-1040	M6	10	TR10x2	17	TR10x2	6h9	17	TR10x2	6h9	14,5	33,5	19

Order example:
The rotary knob on the y-axis can be ordered installed on the left or on the right side.
Order example for left SLW-XY-1040-**L**-200-300 for 200 mm strokelength on the x-axis and 300 mm on the y-axis.
Order example for left SLW-XY-1040-**R**-200-300 for 200 mm strokelength on the x-axis and 300 mm on the y-axis.

Phone +49 - 22 03 - 96 49-145
Fax +49 - 22 03 - 96 49-334

Phone +49 - 22 03 - 96 49-145
Fax +49 - 22 03 - 96 49-334
igus® GmbH
51147 Cologne
Internet www.igus.de
E-mail info@igus.de

DryLin® SET | **EasyTube**

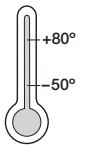

3 Dimensions
2 Styles

This addition to the DryLin® slide table range has an effective but yet solid design, the complete system only consists of a few components. The anodised alumnium tube guides the slide carriage and at the same time protects the leadscrew. The carriage and the trapezoidal nut are manufactured from a high performance polymer bearing material. The system runs without any lubrication, and gives a low friction value combined with an excellent wear rate. Also, iglidur® plain bearings are used in the axial fixing of the leadscrew.

EasyTube with optional accessory (rotary knob, position indicator) **Flange version**

Advantages

- Totally lubrication-free
- Corrosion-resistant when specified with a stainless leadscew
- Light-weight (aluminium and polymer)
- Can be driven from both sides by hand or motor drive
- Temperature-resistant up to 80° C

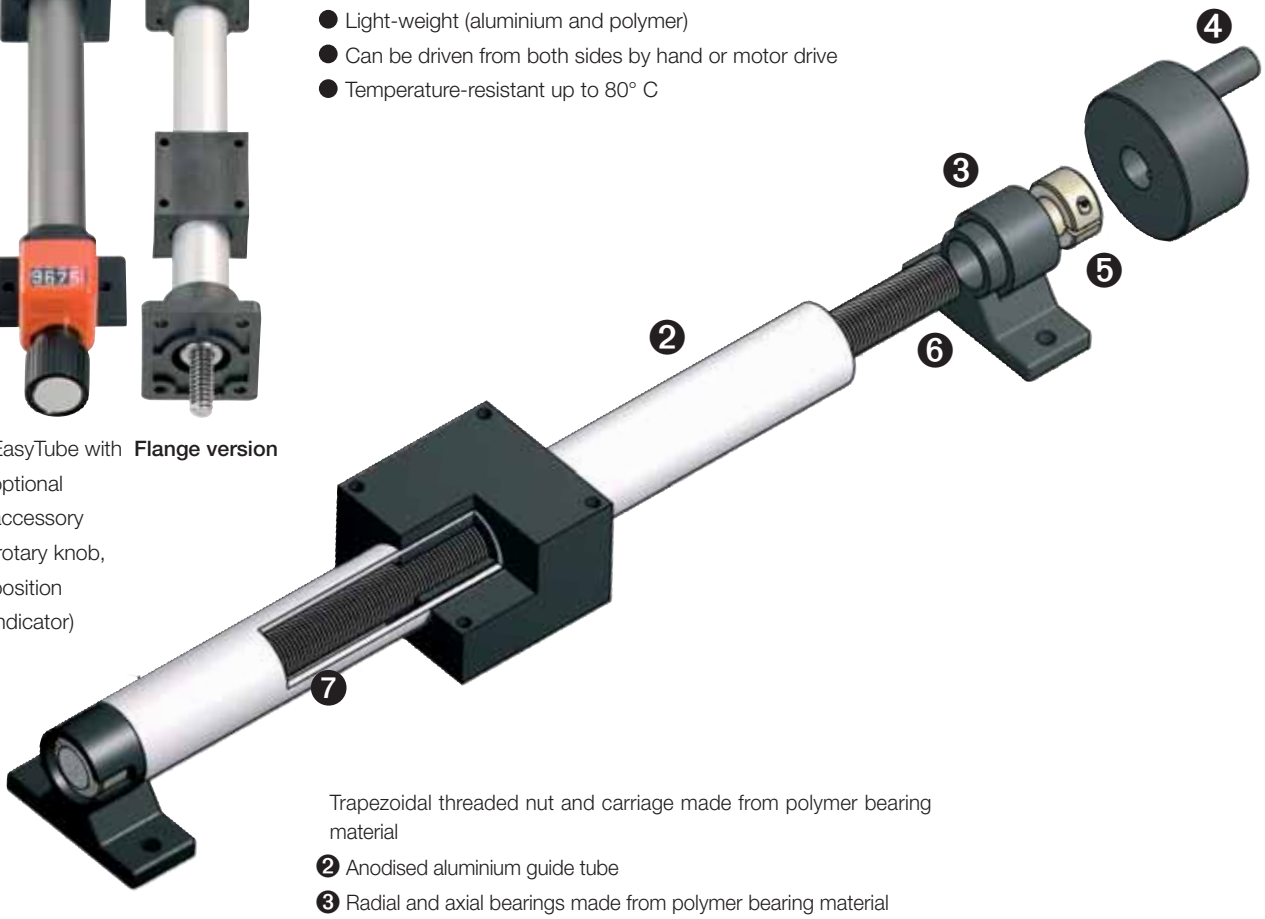

Trapezoidal threaded nut and carriage made from polymer bearing material

❷ Anodised aluminium guide tube
❸ Radial and axial bearings made from polymer bearing material
❹ Hand wheel
❺ Stainless steel clamp
❻ Polymer end block
❼ Steel trapezoidal leadscrew

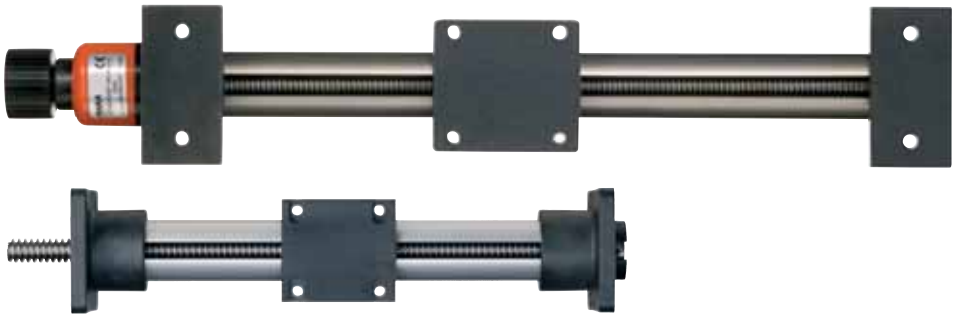

Flange version

Lifetime calculation, CAD files and much more support ► www.igus.de/en/DryLinSET

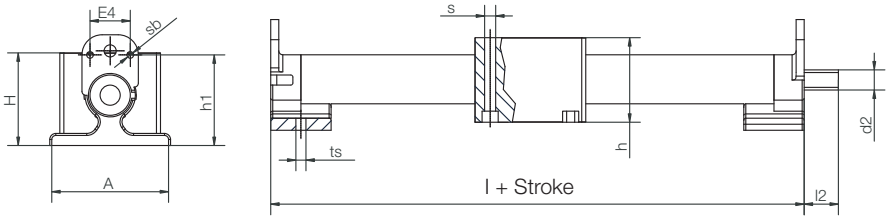

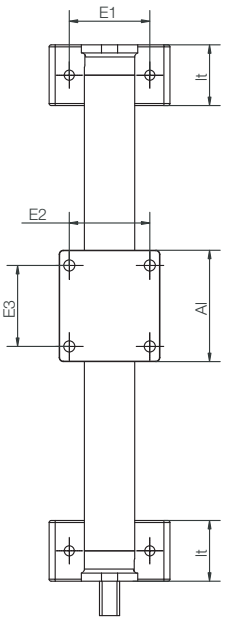

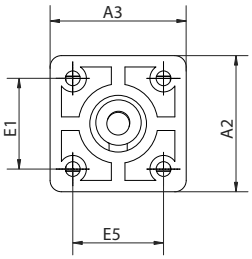

also available as flange version
(for axial fitting)

Lengths [mm] and Weight

Part No.	Maximum Stroke length [mm]	Aluminium Shaft Weight end blocks and carriage [kg]	Aluminium Shaft add. (per 100 mm) [kg]	Max. static load-bearing capacity axial [N]	Max. static load-bearing capacity radial [N]
SET-12-AWM	200	0,05	0,03	10	20
SET-25-AWM	750	0,15	0,12	150	300
SET-30-AWM	850	0,20	0,21	200	400

Dimensions [mm]

Part No.	A	Al	H	E1	E2	E3	E4	l	h	h1	lt	ts	s	sb	l2	d2
SET-12-AWM	30	30	23,5	20	20	20	–	60	22	–	15	3,3	4,2	–	10	M4*
SET-25-AWM	60	55	44	40	40	40	20	115	39	45	30	5,2	5,2	M4	17	TR10x2*
SET-30-AWM	80	55	49	60	40	40	20	125	39	50	35	6,5	5,2	M4	20	TR12x3*

Dimensions [mm] – flange version

Part No.	A2	A3	H	E1	E2	E3	E5	l	h	lt	ts	s	l2	d2
SET-25-AWM-F	60	60	49	40	40	40	40	117	39	30	5,2	5,2	27	TR10x2*
SET-30-AWM-F	80	60	59	60	40	40	40	125	39	35	6,5	5,2	30	TR12x3*

* leadscrew end unmachined

Phone +49 - 22 03 - 96 49-145
Fax +49 - 22 03 - 96 49-334

Phone +49 - 22 03 - 96 49-145
Fax +49 - 22 03 - 96 49-334
igus® GmbH
51147 Cologne
Internet www.igus.de
E-mail info@igus.de

DryLin® SHTP Mini | **small and low-cost**

Properties

- Small version
- Very low weight
- Low cost
- Corrosion resistant
- Accessories available (rotary knob, position indicator …)
- Carriage and end blocks made from high performance polymers

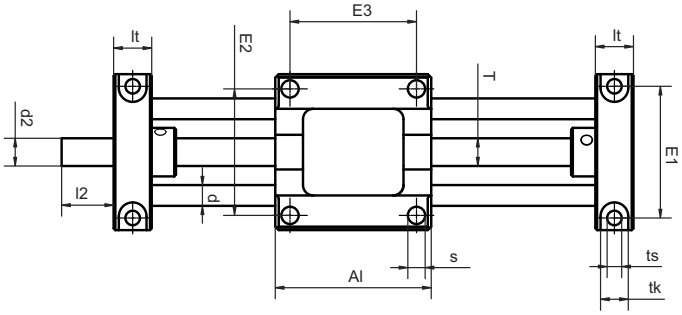

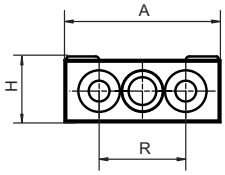

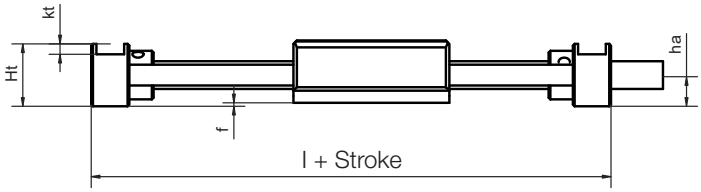

Lengths [mm] and Weight

Part No.	Maximum Stroke length [mm]	Aluminium Shaft Weight [kg]	Aluminium Shaft Add. weight [kg] (per 100 mm)	Special Properties
SHTP-01-06	300	0,11	0,06	Square carriage with four sym. connection bores

Dimensions [mm]

Part No.	A	Al	H	Ht	E1	E2	E3	l	R	f	lt	tk	ts
SHTP-01-06	45	45	19	18	38	36,5	36,5	67	25	1	11	8	4,2

Part No.	s	sg	d	T	l2	d2* Standard	ha	Max. static load-bearing capacity axial [N]	radial [N]
SHTP-01-06	5,1	–	6	M8	15	M8	9	50	200

* Standard versions supplied with leadscrew end unmachined

Order example:
More details on part no. options: ▶ **Page 66.2**

Lifetime calculation, CAD files and much more support ▶ www.igus.de/en/DryLinSHT

DryLin® SHTP | **Cost-effective**

Special properties

- Solid plastic version
- Light weight
- Cost-effective
- Corrosion resistant
- 2 types

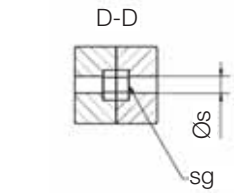

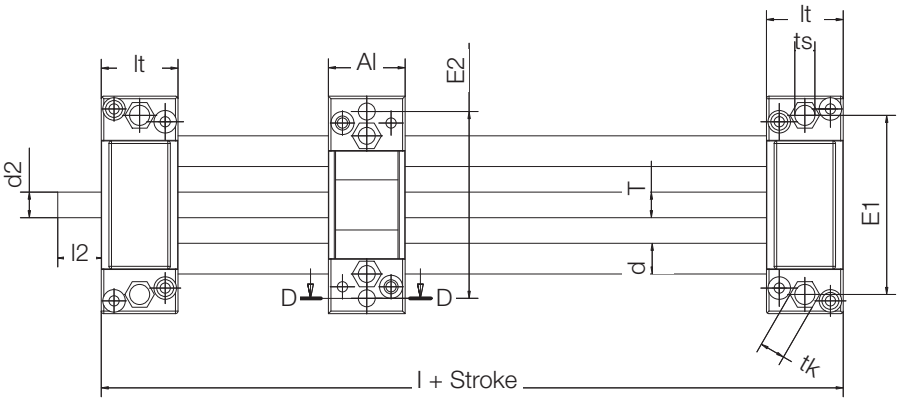

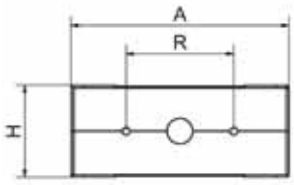

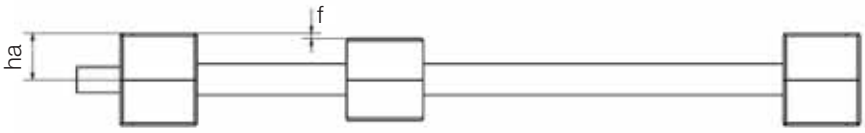

Lengths [mm] and Weight

Part No.	Maximum Stroke length [mm]	Aluminium Shaft Weight [kg]	Add. weight [kg] (per 100 mm)	Special Properties
SHTP-01-12	750	0,35	0,11	Liners and TR nuts made from iglidur® J
SHTP-02-12	750	0,35	0,11	Bearing and nut integrated into carriage

Dimensions [mm]

Part No.	A	Al	H	E1	E2	E3	l	R	f	lt	tk	ts
SHTP-01-12	85	30	36	70	73	–	90	42	2	30	10	6,6
SHTP-02-12	85	30	36	70	73	–	90	42	2	30	10	6,6

Part No.	s	sg	d	T Standard	l2	d2*	ha	Max. static load-bearing capacity axial [N]	radial [N]
SHTP-01-12	6,3	M6	12	TR10x2	17	TR10x2	18	200	800
SHTP-02-12	6,3	M6	12	TR10x2	17	TR10x2	18	200	800

* Standard versions supplied with leadscrew end unmachined

Order example:
More details on part no. options: ▶ **Page 66.2**

Phone +49 - 22 03 - 96 49-145
Fax +49 - 22 03 - 96 49-334

Structure – part no.
SHT-P3-A-2-DX-O

- **Housing color**
  O = orange
- **Direction of rotation**
  DX = clockwise
- **Lead**
- **Display orientation**
- **Size**

Position indicator

- Plastic digital indicator for adjustment and direct reading of slide position
- 4-digit counter (red digit indicates tenths)
- Counting takes place clockwise
- Colour: Orange

Instalation possibilities

0 grade | 90 grade | 180 grade | 270 grade

Display orientation

A* | B | C | D

* Standard

Lead

The lead depends on the used spindle.

Lead	for spindle	See in the display after 1 rotation
1	TR 10 x 1	0010
1,5**	TR 10 x 1,5	0015
2	TR 10 x 2	0020
3	TR 10 x 3; TR 12 x 3	0030
4	TR 18 x 4; TR 10 x 2 LR	0040
5	TR 24 x 5	0050
6	TR 10 x 3; TR 12 x 3 LR	0060
8	TR 18 x 4 LR	0080
12	TR 10 x 12	0120
50	TR 10 x 50	0600
100	TR 10 x 100; TR 10 x 50 LR	1000

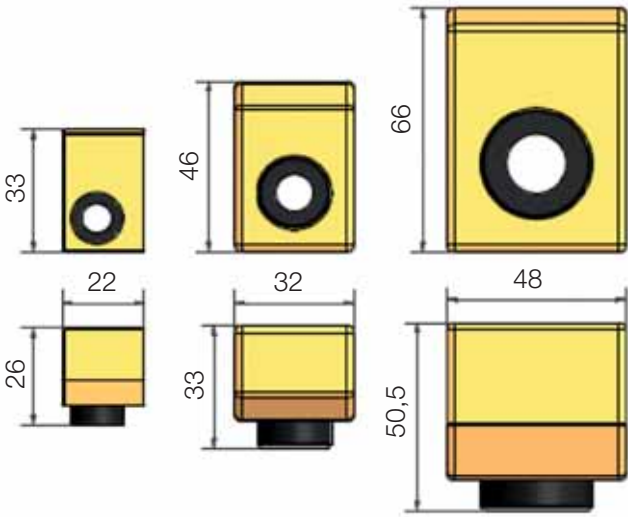

P1 SLW-0630 SHTP-01-06 | **P3** all other linear tables | **P6** SHT(-C)-40 SHT(-C)-50

** See on display after 1 rotation by slope of 1,5

Lifetime calculation, CAD files and much more support ► www.igus.de/en/DryLinSHT

Phone +49 - 22 03 - 96 49-145
Fax +49 - 22 03 - 96 49-334
igus® GmbH
51147 Cologne
Internet www.igus.de
E-mail info@igus.de

Structure – part no.
SHT-HR-8-27-17-OG

- **Grip (optional)**
  OG = without grip
  FG = fixed grip
  UG = folding grip
  SG = security grip
- **Length**
- **Outer diameter D**
- **Inner diameter d**
- **Handwheel**

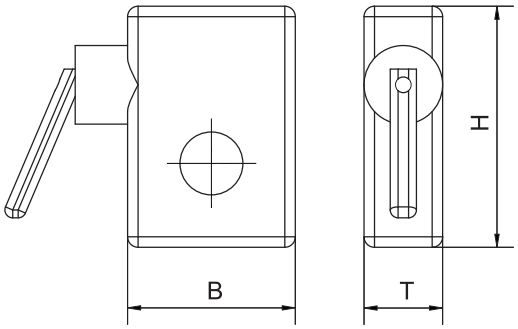

Leadscrew clamp

- Shaft clamping flange for attachment to the position indicator and subsequent mounting on the leadscrew
- Provides a mechanical brake to the leadscrew
- Material: Plastic housing with aluminium shaft clamp
- Colour: Black

Part No.	SHT-HK-12	SHT-HK-16	SHT-HK-20	SHT-HK-30
Size of spindle	TR 10 x 2	TR 14 x 4	TR 18 x 4	TR 24 x 5
Dimensions (B x H x T) in mm	32 x 46 x15	32 x 46 x15	32 x 46 x15	32 x 46 x15

Standard

Grip (optional)

Rotary knob

- Rotary knob for attachment to the end of the leadscrew
- For positioning
- Material: Aluminium and Polymer
- Colour: Black

d [mm]	D [mm]	L [mm]	OG	FG	UG	SG*
8	27	17	●	–	–	–
10	27	17	●	–	–	–
12	42	23	●	–	–	–
14	42	23	●	–	–	–
6	50		–	●	–	–
8	80	75	–	●	●	●
10	80	75	–	●	●	●
12	80	75	–	●	●	●
12	125	109	–	●	●	●
14	125	109	–	●	●	●
18	125	109	–	●	●	●

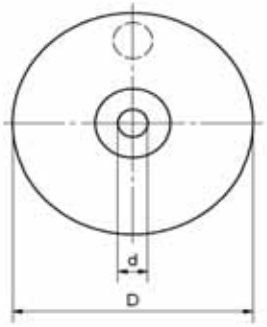

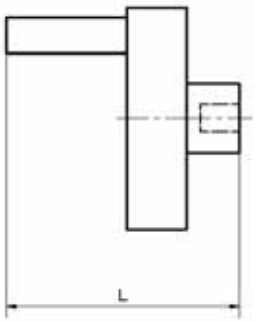

Phone +49 - 22 03 - 96 49-145
Fax +49 - 22 03 - 96 49-334

Phone +49 - 22 03 - 96 49-145
Fax +49 - 22 03 - 96 49-334
igus® GmbH
51147 Cologne
Internet www.igus.de
E-mail info@igus.de

DryLin® ZLW | **Belt Drive**

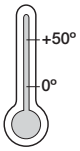

DryLin® toothed belt drives have been developed for the fast positioning of small loads. The linear units with toothed belt drive are corrosion resistant, light and compact, besides having a low mass inertia due to low deadweight of guide and sliding carriage.

Special properties

- Lubricant-free version with plain bearings
- Multi-purpose and simple assembly
- Freely variable stroke length
- Flat and sturdy
- Light and corrosion resistant
- Two installation sizes in 2 versions (Basic and standard series)
- Delivered off the shelf

Technical Data

Material, slider:
- iglidur® J ▶ P. 3.2

Radial bearing:
- Version 01: iglidur® L250 ▶ P. 16.1
- Version 02: grooved ball bearing

Axial bearing:
- iglidur® J ▶ P. 3.2

Drive belt:
- Basic: Neoprene with GF
- Standard: PU toothed belt with steel cord
- up to 5 m/s

The use of polymer plain bearings on all moving parts makes the toothed belt drive 100% free of maintenance and lubricants. The avoidance of lubricants means a high insensitivity to dirt as particles do not get stuck on the moving parts. Consequently the drive offers a high degree of robustness in many applications. You can choose which type according to the application area and requirement:

Basic series – Version 02
This linear system is driven by a black neoprene glass fibre reinforced toothed belt, and is totally free from lubrication. The square pulley shafts are stainless steel, and the high performance polymer gear wheel is fitted onto two deep groove ball bearings. The square drive shaft is also stainless steel, and measures 6mm across flats. A plastic adapter is supplied with the unit which fits onto the square drive shaft, and has an outside diameter of 10mm.

Standard series – Version 02
This linear system is driven by a white polyurethane steel reinforced toothed belt, and is also totally free from lubrication. The pulley shafts and pulleys are made of plated steel, with an option to change to stainless steel, and are fitted onto two deep groove ball bearings.

Both types are available upon request as Version 01, which means that the deep groove ball bearings are replaced by iglidur® plastic bearings, making the system 100% free from lubrication.

Assembly of the part number

ZLW	-1040	-01	-B	-100	L	XX

- XX: Stroke length in mm
- L: L = drive shaft on the left; R = drive shaft on the right; L/R = drive shafts left and right
- -100: Slide length in mm (Standard: 100, on request: 50/200 mm)
- -B: B = Basic series; S = Standard series
- -01: Version 01 (The original) – Deflection and drive shafts with plain bearings; Version 02 (The quick one) – Deflection and drive shafts with ball bearings
- -1040: Size 1040 (Guide shaft diameter 10 / Shaft distance 40 mm); Size 0630 (Guide shaft diameter 6 / Shaft distance 30 mm); Size 0630: 60
- ZLW: DryLin® W Toothed belt linear drive

Lifetime calculation, CAD files and much more support ▶ www.igus.de/en/ZLW

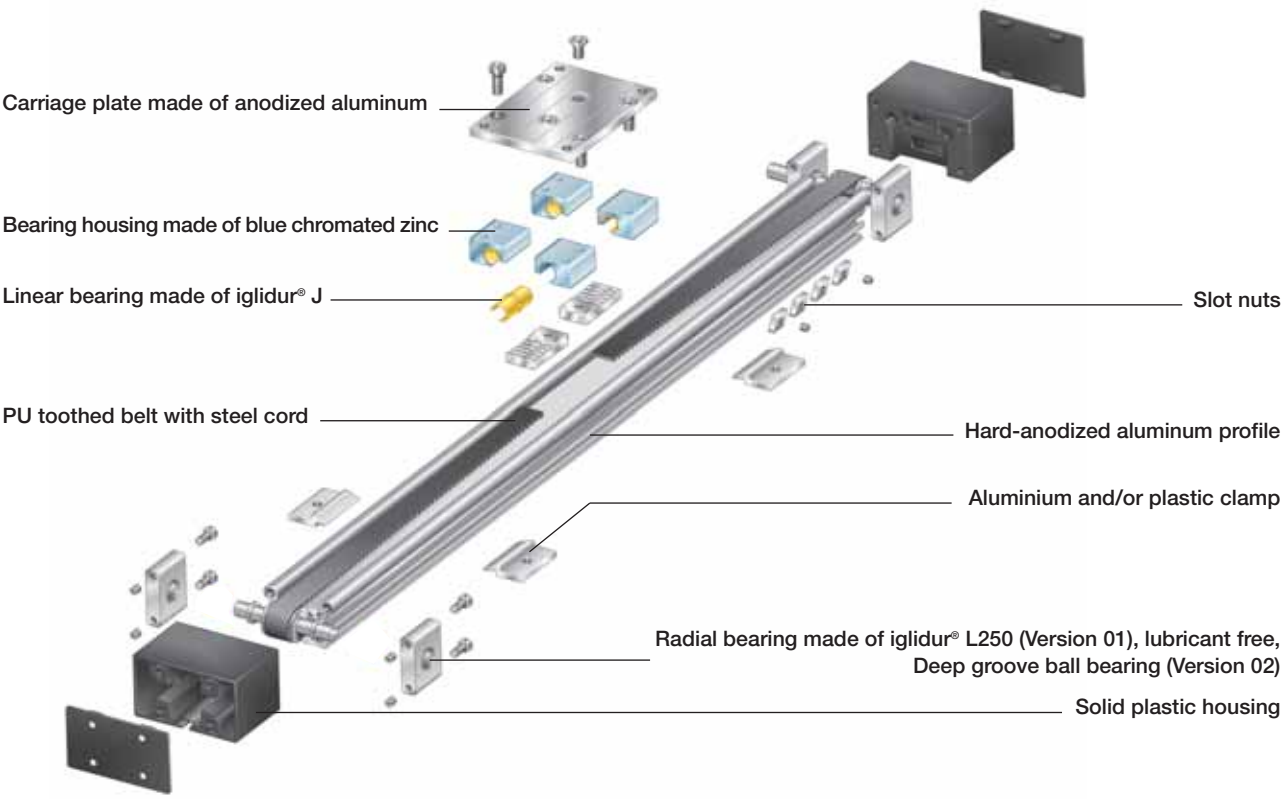

Technical Data

ZLW-1040	Weight without stroke [kg]	Weight 100 mm stroke [kg]	max. stroke length* [mm]	Trans-mission [mm/U]	Gear-teeth	Toothed belt- -material	-width [mm]	-tension [N]	max. radial stress [N]	Guide-bearing	max. speed at 60% on-time [m/s]	Max. position variations of the carriage, load dependent.**
Basic 02	0,9	0,14	2.000	66	RPP 3M	Neoprene with GF	15	150	200	ball bearing	3	±0,35
Standard 02	1,0	0,14	2.000	70	AT 5	PU + steel cord	16	200	300	ball bearing	5	±0,2

ZLW-0630	Weight without stroke [kg]	Weight 100 mm stroke [kg]	max. stroke length* [mm]	Trans-mission [mm/U]	Gear-teeth	Toothed belt- -material	-width [mm]	-tension [N]	max. radial stress [N]	Guide-bearing	max. speed at 60% on-time [m/s]	Max. position variations of the carriage, load dependent.**
Basic 02	0,38	0,08	1.000	54	AT 5	Neoprene with GF	9	75	100	ball bearing	2,5	±0,2
Standard 02	0,43	0,08	1.000	54	AT 5	Neoprene with GF	9	70	150	ball bearing	2,5	±0,2

* Larger stroke lengths upon request.

** these values were measured with maximum load in horizontal orientation

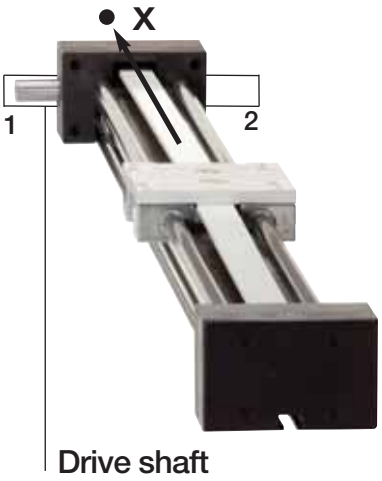

Right or left positioning for drive shaft.
Position determined by view towards x!
1 = Left drive shaft
2 = Right drive shaft
x = Line of vision

Phone +49 - 22 03 - 96 49-145
Fax +49 - 22 03 - 96 49-334

Phone +49 - 22 03 - 96 49-145
Fax +49 - 22 03 - 96 49-334
igus® GmbH
51147 Cologne
Internet www.igus.de
E-mail info@igus.de

DryLin® ZLW 0630 | **Belt Drive**

The DryLin® ZLW-0630 Belt Drive is the perfect solution for easy positioning in limited design space. The overall height is only 31 mm, the stroke length is variable up to 1000mm (longer strokes potentially possible upon request).
DryLin® ZLW-0630 is available as “Basic 02” and “Standard 02”.

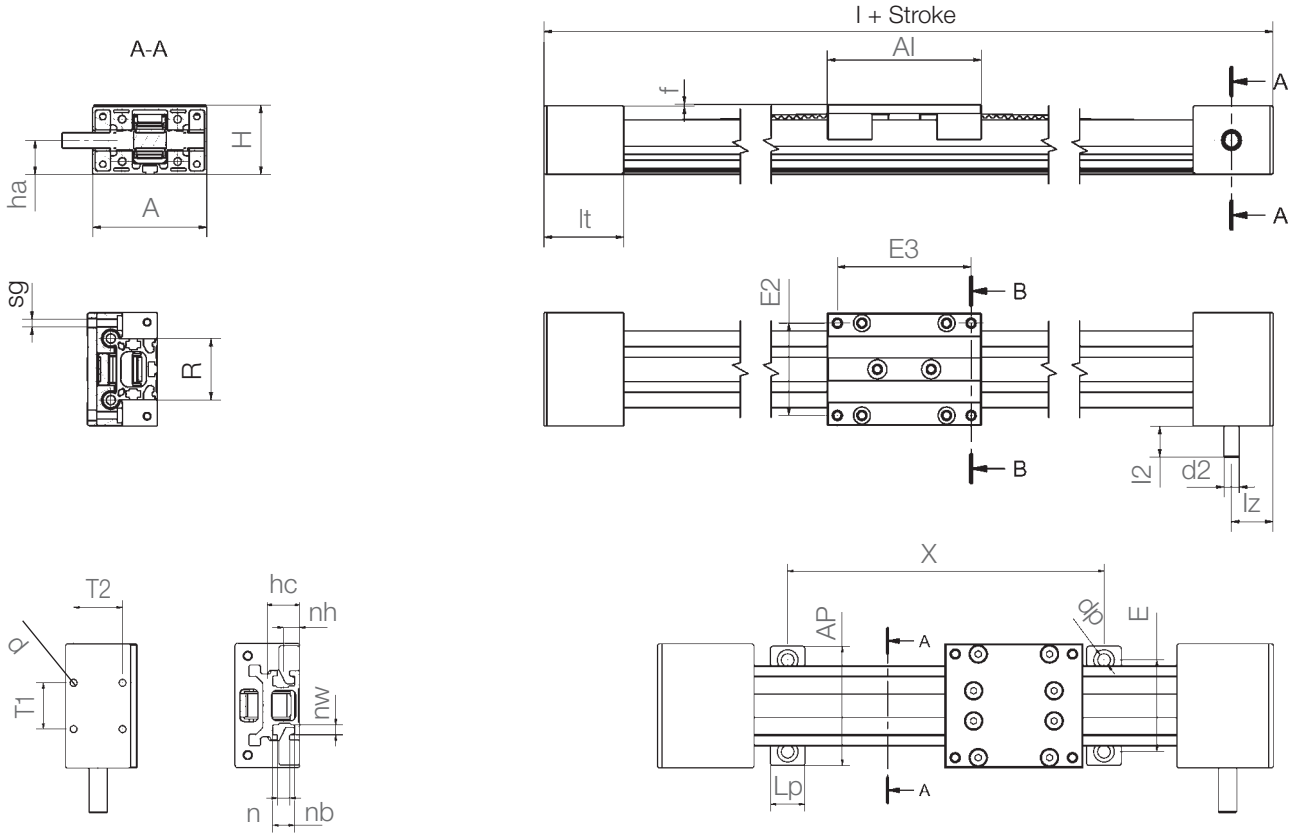

Dimensions [mm]

Part No.	A –0,3	Al	H	E2 ±0,15	l	hc	E3 ±0,15	R ±0,15	f	lt ±0,3	sg	ha	lz	l2	d2
ZLW-0630-02-...	54	60	31	45	144	13,5	51	30	3	42	M4	14	22	20	8

* Basic version: square (“4-Kant”) or ø 10 mm

Connecting dimensions Part No.	X	E ±0,2	AP –1	LP	dp	n	nb	nw	nh	T1 ±0,25	T2 ±0,25	d
ZLW-0630-02-...	variable	40	52	15	5,5	5,2	9,5	4,3	7	20	21	3,2

Required drive torque*; horizontal orientation – ZLW-0630, basic series – version 02

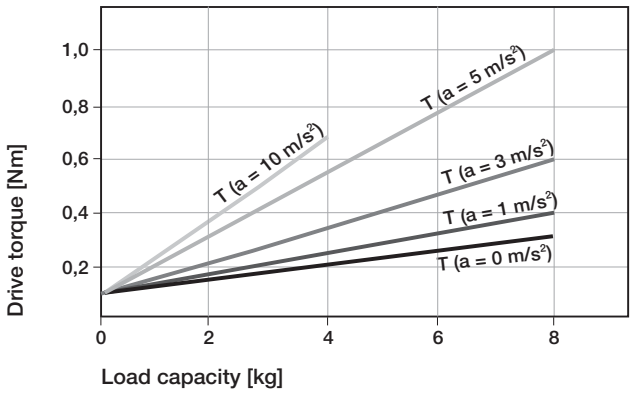

Required drive torque*; vertical orientation – ZLW-0630, basic series – version 02

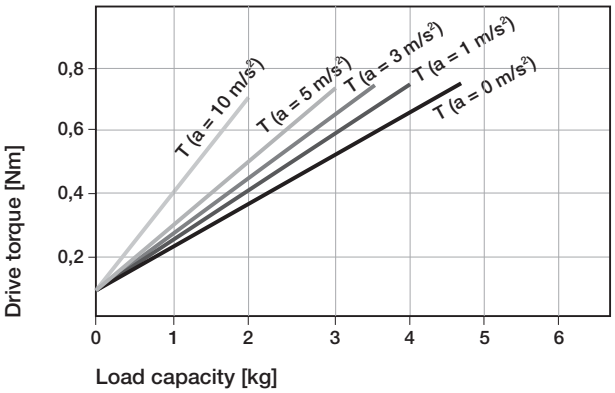

Required drive torque*; horizontal orientation – ZLW-0630, standard series – version 02

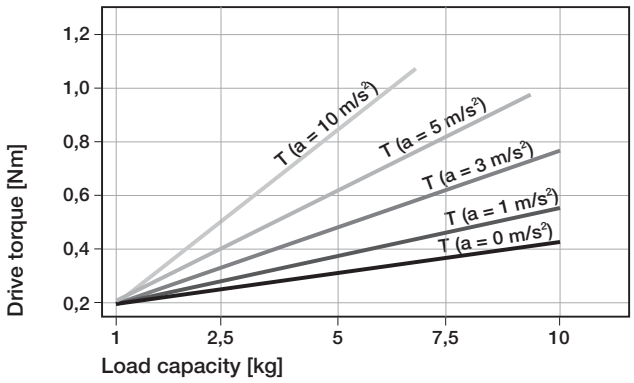

Required drive torque*; vertical orientation – ZLW-0630, standard series – version 02

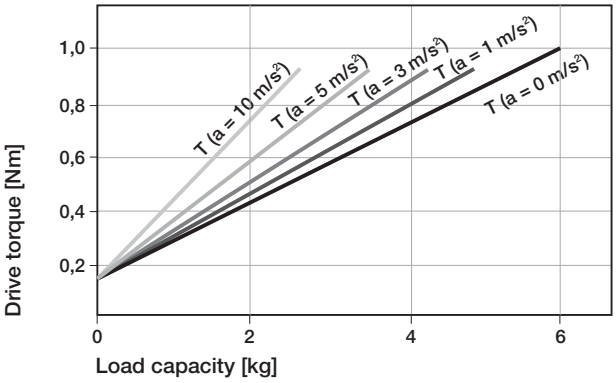

* Assumption: The moving mass is located in a circumscribed circle with a max. R = 100 mm to the middle of the guiding rail, max. permissible torque version 01: 1.3 Nm, a = 0 m/s²; version 02: 2,4 Nm, a = 0 m/s²; constant drive without nominal value acceleration

Maximum load compared: ZLW-0630 and ZLW-1040, ED 100%

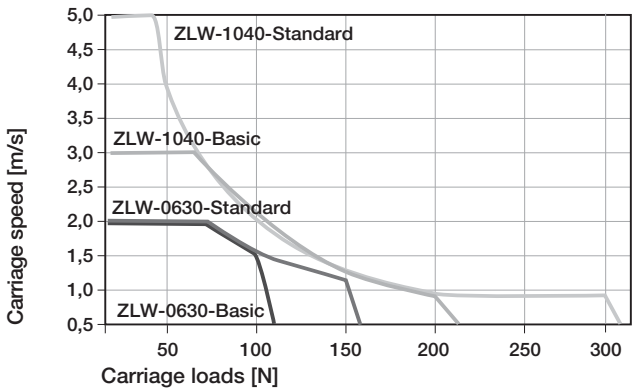

The diagram accounts for the sum of all forces active on the carriage.
OT = On-time

Sag between unsupported end blocks ZLW-0630, version basic 02 and standard 02

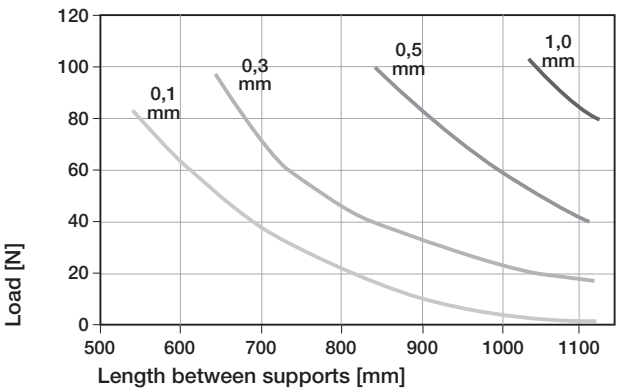

Sag permissible up to maximum 2 mm.

Phone +49 - 22 03 - 96 49-145
Fax +49 - 22 03 - 96 49-334

Phone +49 - 22 03 - 96 49-145
Fax +49 - 22 03 - 96 49-334
igus® GmbH
51147 Cologne
Internet www.igus.de
E-mail info@igus.de

DryLin® ZLW 1040 | **Belt Drive**

The DryLin® ZLW 1040 belt drive is the perfect solution for high speed positioning applications. The stroke length is variable up to 2000 mm (longer strokes potentially possible upon request). The carriage is available in three lengths.
DryLin® ZLW-1040 is available as “Basic 02” and “Standard 02”.

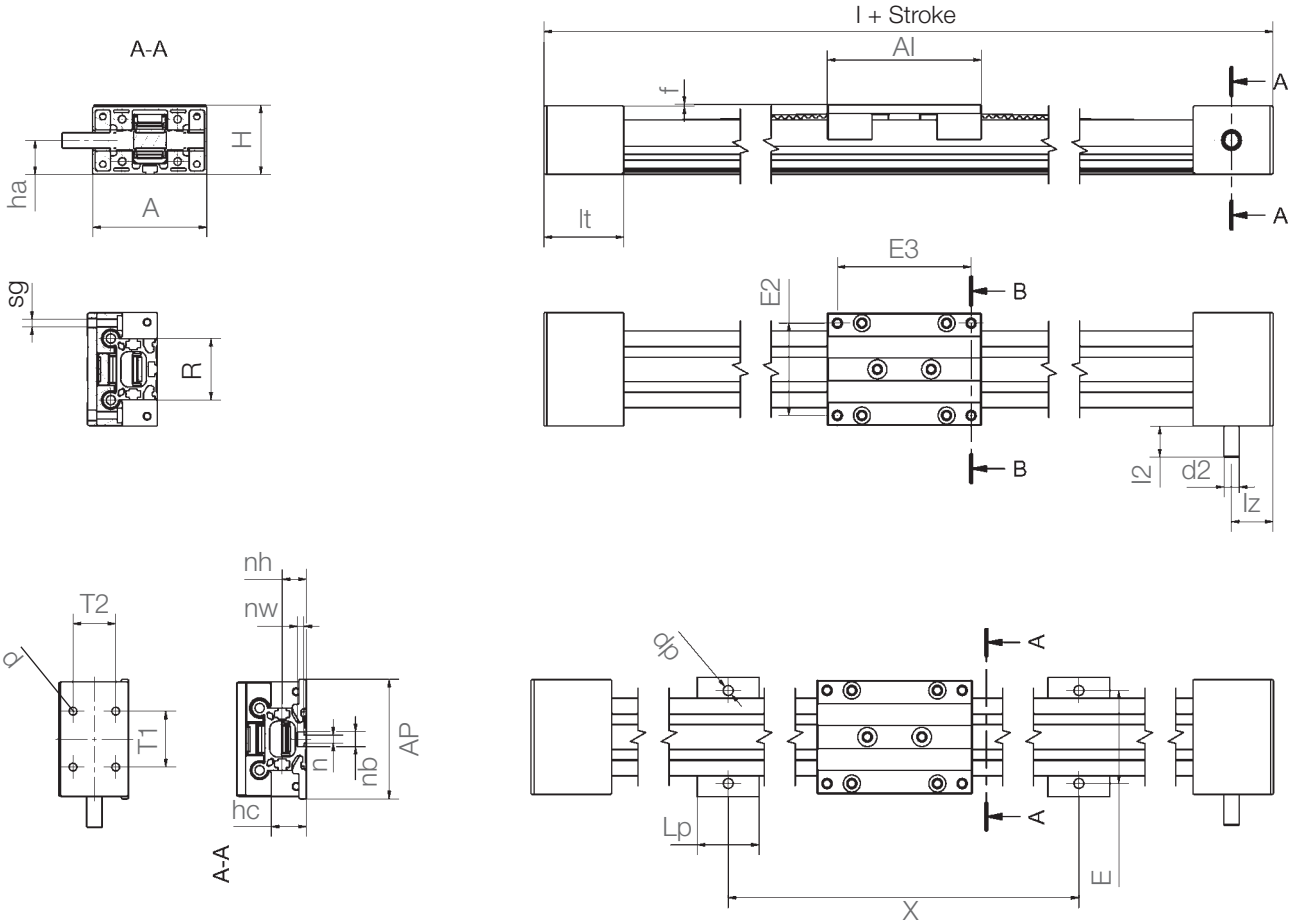

Dimensions [mm]

Part No.	A –0,3	Al	H	E2 ±0,15	l	hc	E3 ±0,15	R ±0,15	f	lt ±0,3	sg	ha	lz	l2	d2*
ZLW-1040-02-...	74	100	45	60	204	22,5	87	40	1	52	M6	22	27	20	10

* Basic version: square (“4-Kant”)

Connecting dimensions Part No.	X	E ±0,2	AP –1	LP	dp	n	nb	nw	nh	T1 ±0,25	T2 ±0,25	d
ZLW-1040-02-...	variable	60	78	40	6,4	5,2	9,5	4,3	15,5	36	26,5	5,0

Required drive torque*; horizontal orientation – ZLW-1040, basic series – version 02

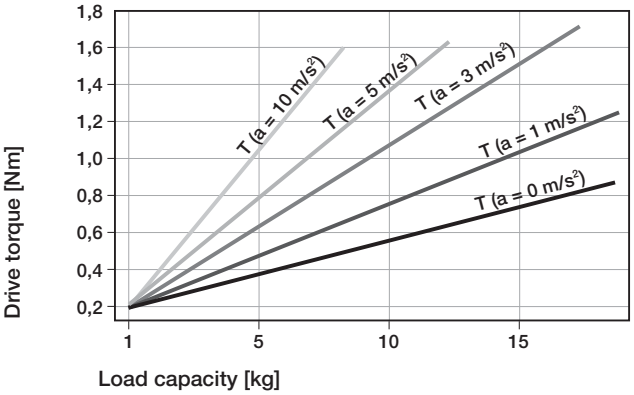

Required drive torque*; vertical orientation – ZLW-1040, basic series – version 02

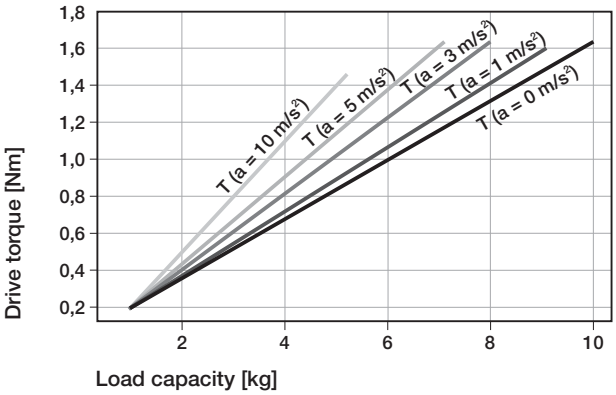

Required drive torque*; horizontal orientation – ZLW-1040, standard series – version 02

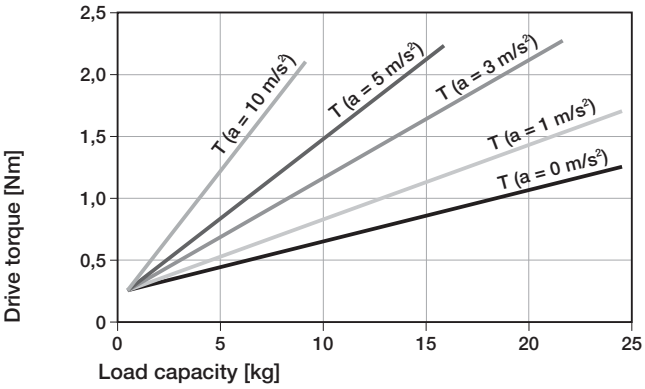

Required drive torque*; vertical orientation – ZLW-1040, standard series – version 02

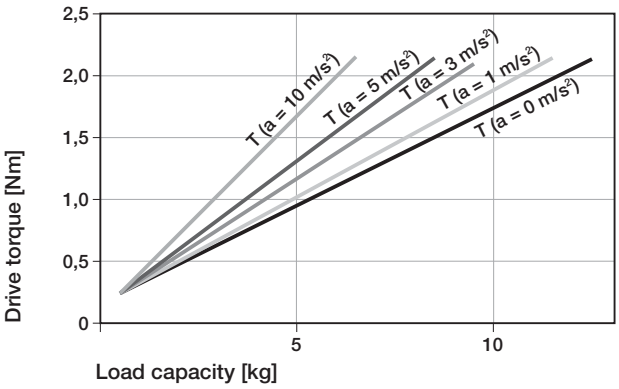

* Assumption: The moving mass is located in a circumscribed circle with a max. R = 100 mm to the middle of the guiding rail, max. permissible torque version 01: 1.3 Nm, a = 0 m/s²; version 02: 2,4 Nm, a = 0 m/s²; constant drive without nominal value acceleration

Maximum load compared: ZLW-0630 and ZLW-1040, ED 100%

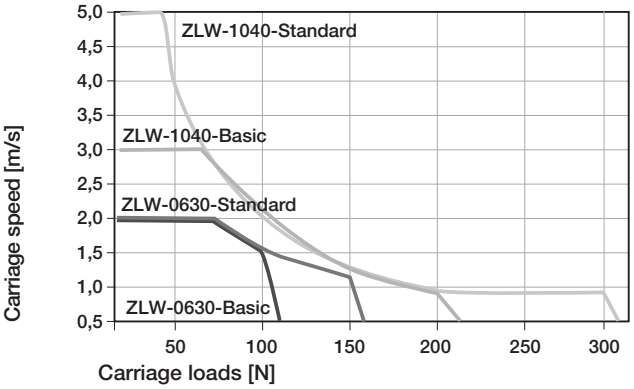

The diagram accounts for the sum of all forces active on the carriage.
OT = On-time

Sag between unsupported end blocks ZLW-1040, version basic 02 and standard 02

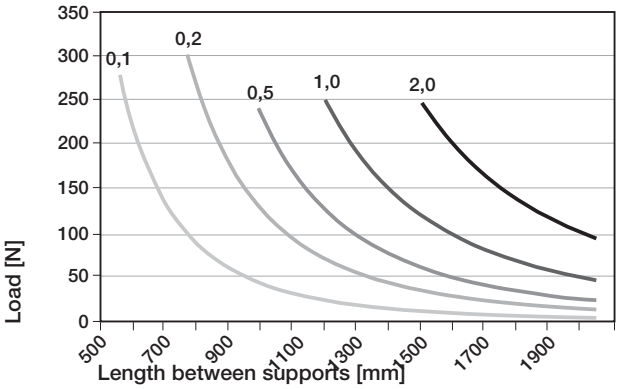

Sag permissible up to maximum 2 mm.

Phone +49 - 22 03 - 96 49-145
Fax +49 - 22 03 - 96 49-334

DryLin® ZAW | **Extension Arm Drive**

Phone +49 - 22 03 - 96 49-145
Fax +49 - 22 03 - 96 49-334
igus® GmbH
51147 Cologne
Internet www.igus.de
E-mail info@igus.de

Special properties

- Centre drive unit is fixed, only the profile with the applied load is moving
- Profile made from hard anodised aluminium
- Absolutely lubricant-free and corrosion resistant
- Low weight
- High accelerations
- Belt drive tension standard version: 200 N

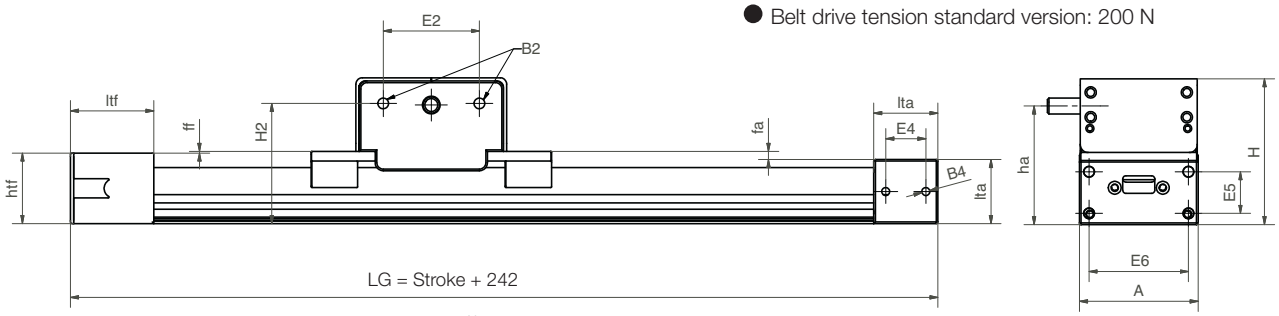

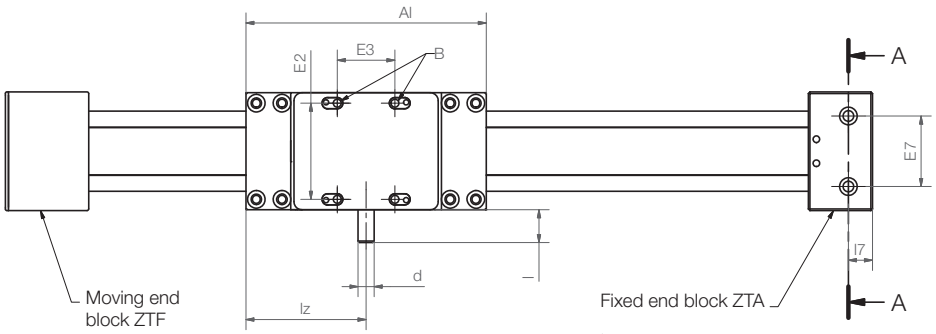

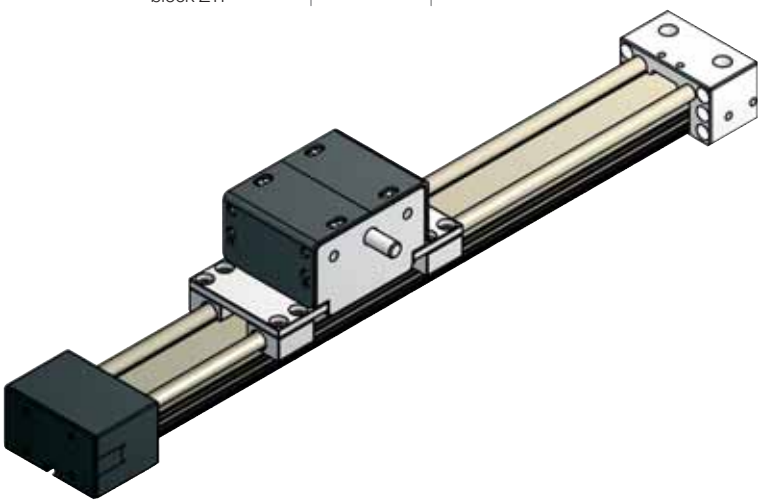

Dimensions [mm]

Part No.	A –0,3 [mm]	H [mm]	LG Stroke [mm]	Al ±0,3 [mm]	ha ±0,1 [mm]	d h9 [mm]	l +1 [mm]	lz [mm]	E2 ±0,15	E3 ±0,15 [mm]
ZAW-1040-02-R/L-LG	74	91	242	150	74	10	20	75	60	60

Part No.	B –0,3	B2	htf Stroke [mm]	ltf ±0,3 [mm]	ff ±0,1 [mm]	fa h9 [mm]	lta +1 [mm]	E4 [mm]	B4 ±0,15	E5 ±0,15 [mm]	E6 [mm]
ZAW-1040-02-R/L-LG	M6	M8	44	52	2	5	40	25	M6	26	62

Part No.	E7	l7	tg	tk	ts	kt
ZAW-1040-02-R/L-LG	44	15	M8	11	6,6	8

The DryLin® ZLW belt drive can be fastened in different ways (clamp and slot nuts included in delivery):
The orientation of the drive is optional. Overhead installation is the best option against fouling.

1. Clamping offers an easy fastening option for the drive, among other things, on aluminum machine profiles. Part No. 75.40.
2. Slot nuts enable the installation of 3 sides (1040: left, right, below) or 2 sides (0630: left, right) as well as the fixing of sensors and proximity switches.
3. Screw connection: Threaded holes for individual screws are located at each end block face.

Clamp

Included in delivery
Part No. 75.40ZLW (Size 1040)
Part No. ZTZ-063006 (Size 0630)

Slot nuts

Included in delivery
Part No. NOR-20602

Screw connection

4 x M6/M4 (optional)

Directions for installation: The end blocks should not be used as a mechanical stop under any circumstances. A minimum spacing of 10 mm should be provided on both sides. The safety distance provided at both sides of the guide carriage can be reduced provided that it is ensured that the housings of the drive and end blocks do not collide with the mechanical parts. The igus® staff would be glad to provide you with more information on the fastening and connecting of the belt drive.
Call +49 - 22 03 - 96 49 - 283, or write to info@igus.de

Motor flange

The motor flange can be fastened onto the end block with four screws. Different types of motor flanges are available.
Item no. SAX-104005

The DryLin® ZLW belt drive is also available with hand crank.

Part No. ZLW-HR-0630
(Size 0630)
Part No. ZLW-HR-1040
(Size 1040)

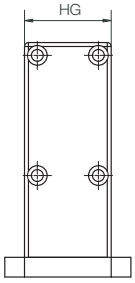

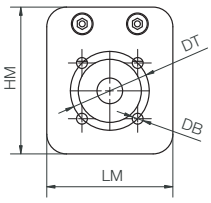

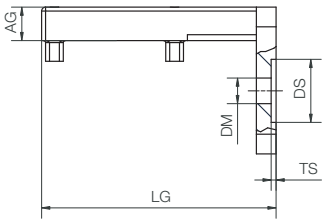

Suitable for	Part No.	Base plate			Motor mounting plate						
		LG	HG	AG	HM	LM	DT	DM	DS	TS	DB
ZLW-1040	MF-1040-xx	138	44	17	____*	____*	____*	____*	____*	____*	____*
ZLW-0630	MF-0630-xx	110,5	28	12	____*	____*	____*	____*	____*	____*	____*

*___ : Please request individual values for each motor type

Phone +49 - 22 03 - 96 49-145
Fax +49 - 22 03 - 96 49-334